RF Integrated Circuit Research Lab Activity Summary

Advisor: Dr. Saiyu Ren
Dept. of Electrical Engineering, Wright State University
Ph: 937-775-5051, Fax: 937-775-3936

WRIGHT STATE UNIVERSITY

Research Description: radio frequency and mixed signal microelectronic Integrated Circuits (ICs) with small size, weight, and power applications including analog to digital converters, anti-jam Global Positioning Satellite (GPS) receivers, read out ICs for variety of sensors, and broad band frequency synthesizers. This involves devising innovative microelectronic circuits, completing the design and layout of the circuits, fabricating the microelectronic chip, and testing to validate performance.

Highlights:

- *Broadband high-resolution ADC ICs*
- *GPS RF Receiver ASICs*
- *Low Power ROICs*
- *Wide Tuning Range Frequency Synthesizer*
- *IF Transceiver*
- *Analog and Digital PLLs*
- *Hardware Security*

Wide Tuning Range Frequency Synthesizer

- Develop ultra high tuning range frequency synthesizers to operate in the GHz frequency ranges with very small size, weight and power.

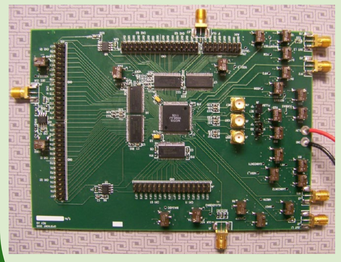

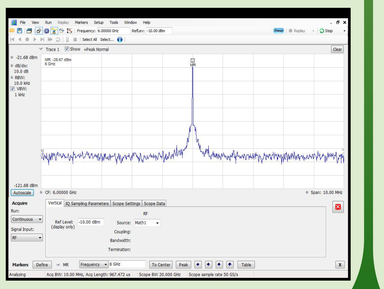

6GHz differential FFT

Broad Band ADCs

- The broad objective is to develop components which support the design of a low cost receiver system on chip.
- Move the ADC closer to the antenna.

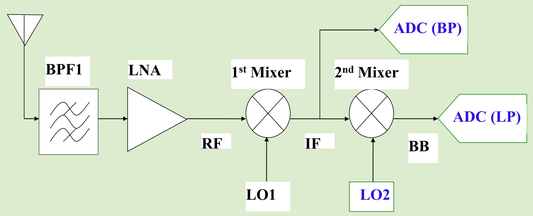

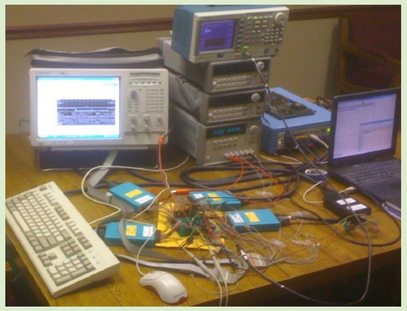

Read Out Integrated Circuit (ROIC) for IR Focal Plane Array and Carbon Nano-tube (CNT)

- Develop high speed ROIC architectures and ASICs for high fidelity processing of IR focal plane array images.
- Develop low power, small size, deployable ROICs for CNT sensor applications

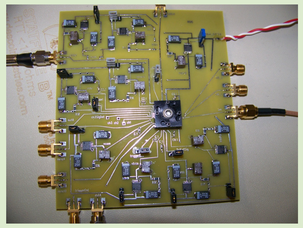

Multichannel RF Front End GPS Receiver ASIC

- Multichannel GPS receiver ASIC to interface to antenna array and anti-jam back end digital processing for small size low power anti-interference applications

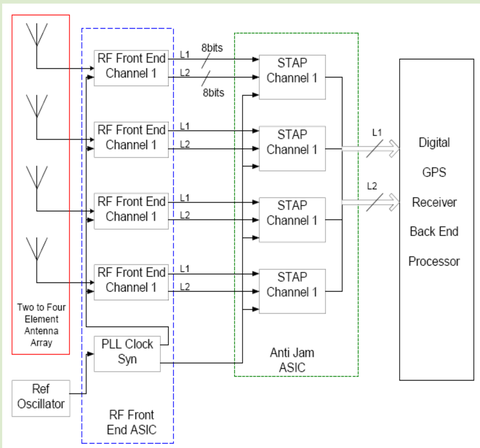

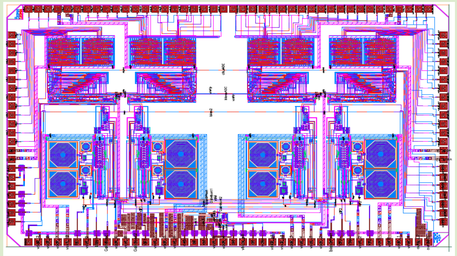

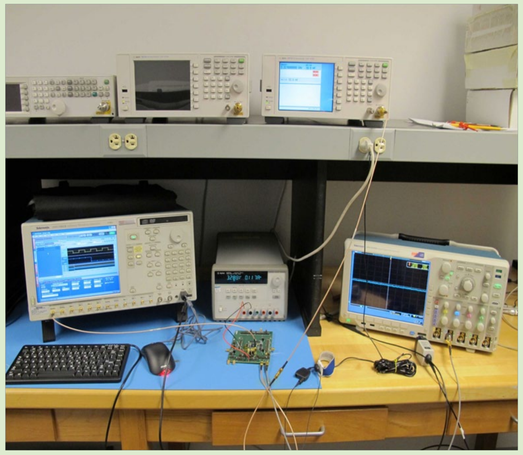

Intermediate Frequency Transceiver

- Same hardware for up conversion and down conversion
- The outputs can drive both 50Ω and high impedance load
- The inputs can take both 50Ω and high impedance load
- Low power, small size
- Diff S-band inputs, quad Base-band outputs
- Quad Base-band inputs, diff S-band outputs

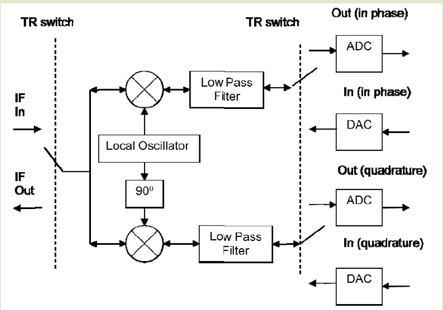

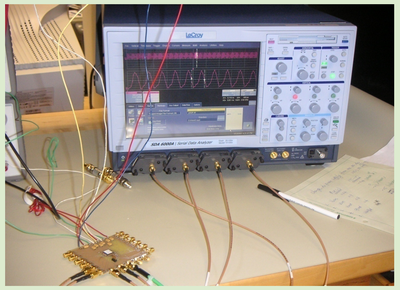

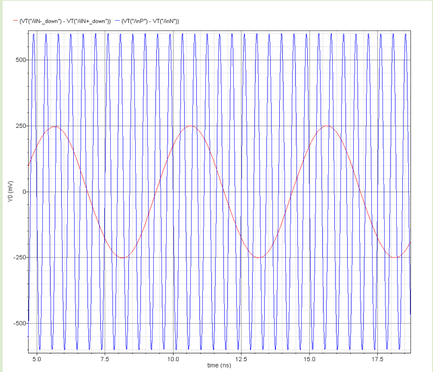

IF Stage Down Conversion Performance
2.3 GHz Input/300 MHz Output